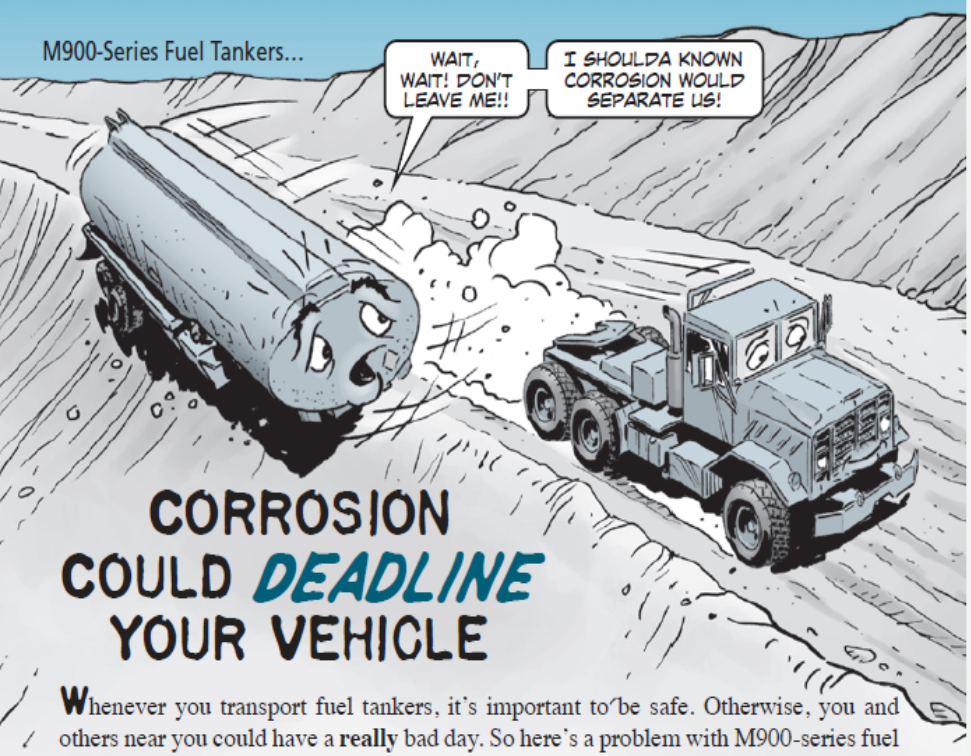

CORROSION COULD *DEADLINE* YOUR VEHICLE

Whenever you transport fuel tankers, it's important to be safe. Otherwise, you and others near you could have a **really** bad day. So here's a problem with M900-series fuel tankers that you **must** know about to keep yourself and others safe while hauling fuel.

A recent inspection found too much corrosion around the upper coupler plate and frame structure. Corrosion build-up weakens the frame structure and can cause the fuel tanker to separate from the prime mover. But you can prevent this from happening.

If your unit has M967A1, M967A2, M967P1, M967A1P1, M967A2P1, M969A1, M969A2, M969A3, M969P1, M969A1P1, M969A2P1, M969A3P1, and M970A1 fuel tankers, inspect each vehicle. TACOM SOUM 13-008 gives you details on what to do. It's available at:

https://tulsa.tacom.army.mil/SAFETY/message.cfm?id=SOUM13-008.html

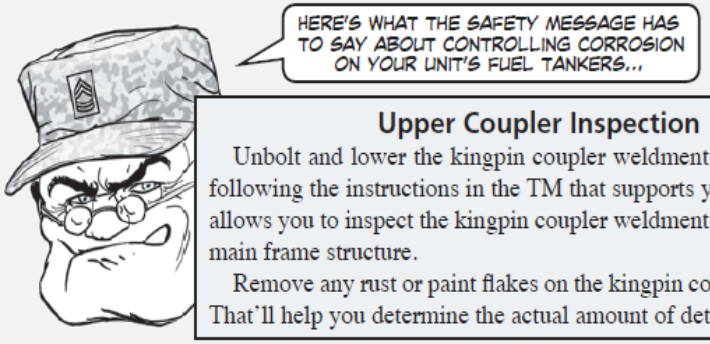

Upper Coupler Inspection

Unbolt and lower the kingpin coupler weldment from the tanker following the instructions in the TM that supports your model. That allows you to inspect the kingpin coupler weldment and the tanker's main frame structure.

Remove any rust or paint flakes on the kingpin coupler weldment. That'll help you determine the actual amount of deterioration.

Use a 0 to 6-in vernier caliper to measure the area and thickness of each cleaned corroded area. The vernier caliper is included in the standard automotive tool set (SATS), NSN 4910-01-490-6453.

The original thickness of the upper coupler plate is .375 inches. The kingpin coupler weldment must measure .319 inches or more for the upper coupler to be usable.

This table will help you figure out the extent of corrosion deterioration and loss of material thickness:

Component	Original thickness (inches)	10 percent loss (inches)	15 percent loss (inches)	50 percent loss (inches)	150 percent repaired thickness (inches)
Upper coupler plate	.375	.338	.319	.188	.563
Upper coupler support cross members	.250	.225	.213	.125	.375

When overall thickness is less than .319 inches, the upper coupler isn't repairable and the tanker is deadlined. You'll have to remove and replace the king coupler weldment to bring your tanker back to a fully mission capable (FMC) status.

And when overall thickness is .319 inches or more on the upper coupler, it's serviceable, but you still need to take a few corrective steps.

First, remove all corrosion and old paint. Next, treat and repaint the area following the spot painting guidance in TB 43-0242, *WD CARC Spot Painting*. Then insert drainage holes in the kingpin coupler weldment.

Here's where those drainage holes should be located:

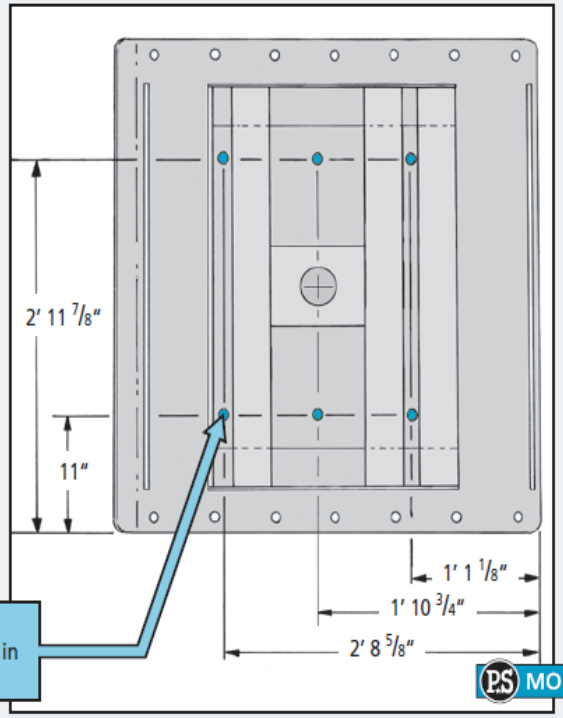

For M967A2 and M969A3 models, drill six 5/8-in holes in kingpin coupler weldment.

PS MORE

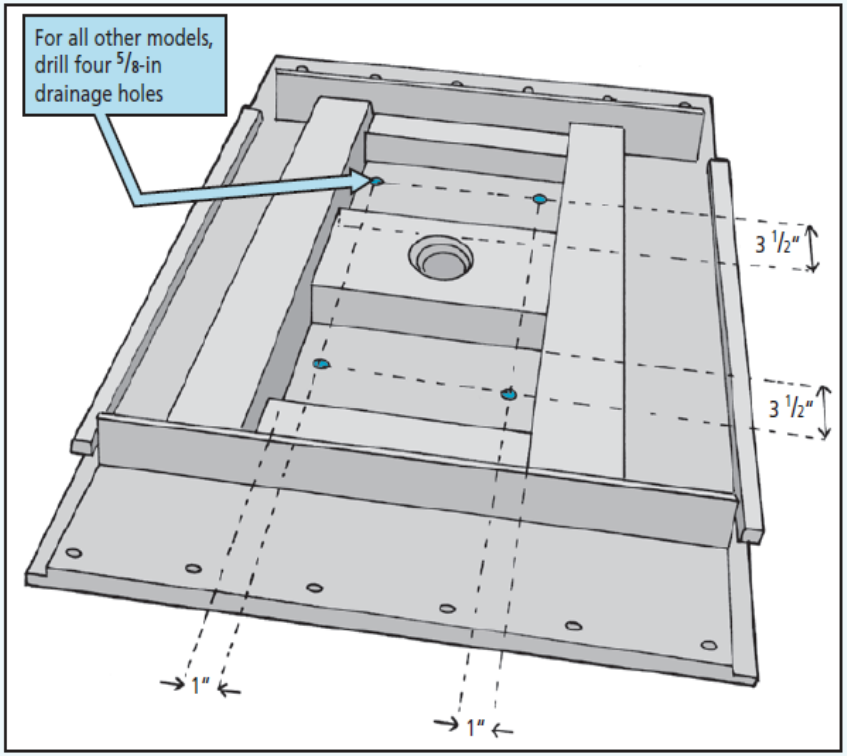

When you order kingpin couplers again, they will already have drain holes. So all you'll have to do is install them.

Tanker Frame Inspection

You'll need to inspect your fuel tanker's frame rails and high structural stress areas, too. Take a good look at the frame area under the upper coupler. Clean the corroded areas and then measure them with the caliper. The material must be .213 inches or more for the frame rails and structural components to be usable. See this table for more info:

Component	Original thickness (inches)	10 percent loss (inches)	15 percent loss (inches)	50 percent loss (inches)	150 percent repaired thickness (inches)
Tanker frame	.250	.225	.213	.125	.375
Tanker cross members	.250	.225	.213	.125	.375

You'll find high structural stress areas at structural stiffeners, where cross members connect with frame rails, and where bottom flanges meet with the beam web and weld joints. Even if you see only a little corrosion, you should still measure these areas.

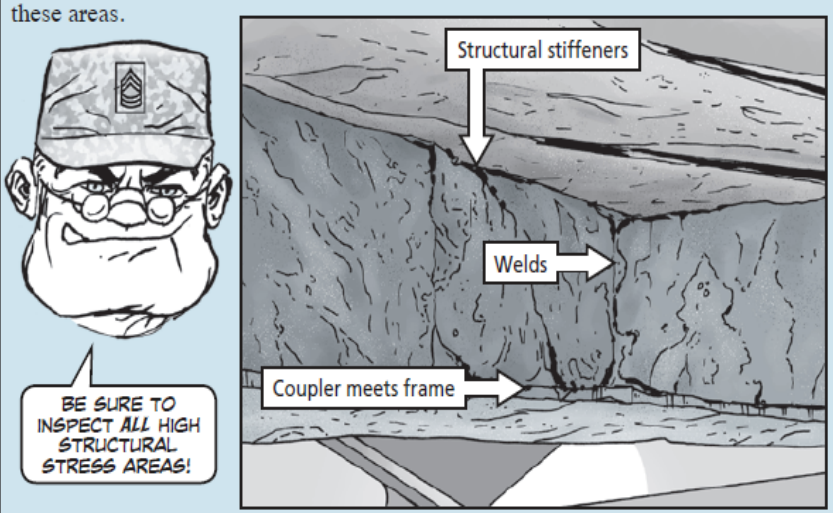

Determine the cross-sectional thickness of the corroded area using the vernier caliper. When the overall material thickness is .213 inches or more on the frame rails and structural components, remove all corrosion and any old paint. Then treat and repaint using TB 43-0242 for guidance.

If the thickness of the frame rails and structural components is less than .213 inches, the tanker is non-mission capable until repairs are made.

Areas that measure between .125 and .212 inches on the frame rails and structural components should be reinforced to .375 inches. The rebuild will require heavier sectional members, including backing plates. Refer to Para 5-5, Repairing Deterioration Caused by Corrosion, in TB 9-2510-242-40. Section IV of the TB gives you info on the equipment and skills necessary to repair the tankers.

If the frame rails and structural components have a thickness of less than .125 inches, the entire structural section, including the frame rails, cross members and structural stiffeners, must be replaced.

Add to Annual PMCS

TACOM LCMC plans to update TM 9-2330-329-14&P, TM 9-2330-330-14&P, TM 9-2330-356-14&P, and TM 9-2330-398-24&P in FY14. The TM changes will include requirements to:

- perform an annual PMCS at the field maintenance level for each coupler plate check identified.
- annually inspect the coupler plate area for corrosion.
- disassemble and clean the potential corrosion problem areas as required.

PS END